MESA USA
NATIONAL ENGINEERING DESIGN COMPETITION
2018-2019
Arduino Based Solutions for Humans

RESOURCE DOCUMENT

This document provides critical information to assist teams in successfully meeting all competition requirements, including detailed descriptions and examples of various required elements.

TECHNICAL PRESENTATION & INTERVIEW

As the title states this is a technical presentation and interview, which means, that judges will be looking to understand the most technical aspects of your project with a focus on the final design. Any information presented should be connected to elements of this final design and help the judges understand how this prototype evolved out of the design process, including how research, design, and testing led to specific design elements. Specific information about how the client's needs are met, and the integration of Arduino are also very important.

The technical interview is made-up of two elements: the presentation with demonstration, and the interview. While each will be scored separately, both should work in conjunction to provide an overview of the technical functionality of the presented device.

TECHNICAL PRESENTATION WITH DEMONSTRATION–

The presentation and demonstration is the first part of this component. Teams are expected to provide a verbal overview of their project focusing on the development of the final prototype in a 10 minute presentation & prototype demonstration. The poster must be used to support the presentation, but other visual aids like the engineering design notebook may also be used. During the demonstration, teams can show judges the individual elements of the prototype. The focus should be on the team's success in engineering the prototype. Functionality, hardware and software integration, specific features or elements that set the design apart from others should be highlighted.

Overall, keep in mind the following guidelines for the presentation:

- All team members should share equally in your presentation. No matter what approach you take, please make sure your team's demeanor and presence is well suited for the event.
- All team members' voices should be heard and understood by all judges. All team members' eye contact should be distributed across the audience.
- All team members should stay focused on the topic, transitioning very smoothly from point to point. Do your best to maintain the attention of the judges through discussion.

TECHNICAL INTERVIEW – Q&A WITH JUDGES –

The Q&A with judges is the second component and allows the judges to dig deeper into the team's thought process and design choices. Although judges will be provided with a set of prompting questions, the point of the Q&A is to provide time for the team and judges to have an open discussion about the prototype. Judges will be able to ask about elements that they were curious about that may have been missed in the presentation. Judges may ask for more specific detail about why one material was chosen over another, or why coding processes were done a certain way versus another. All questions will be in alignment with the major content areas of: Usability, Team Objective, Engineering Design Process, Materials and Technology, Data, Conclusions and Recommendations, and Support Materials.

POSTER & SYMPOSIUM

The Poster is meant to be a visual overview of your final design. At the National Event posters will put on display in a public symposium in addition to being used during the interview. The poster should be able to stand alone to provide the viewer; a clear understanding of the project; key steps in the design process that led to this design; and the functionality of the prototype including Arduino hardware and software. Teams will be expected to stand with the poster at all times during the symposium to talk about their design and answer questions.

All posters must be printed for the National Event. Posters can be designed using PowerPoint and templates are available. For additional resources on Academic Poster Design investigate resources provided on the MESA USA site and visit http://gradschool.unc.edu/academics/resources/postertips.html#design.

All posters must have a title, team information, and the official MESA logo (contact your state office for a logo).

POSTER Elements (detailed description by Section)

1. ***Problem Statement:*** This section is a brief overview of the problem that your project addresses. It should discuss the client, the impact on the client, and any specific challenges that your prototype addresses. A good problem statement will not have more than 50 words.
2. ***Objective:*** This section should include a brief discussion of user requirements, highlight design choices made to meet client needs, and overview desired attributes and qualities. A person reading the objective should be able to understand scope of the project and priorities in design in the 30 seconds it takes to read it. A good objective will not have more than 50 words.
3. ***Prototype:*** A picture or schematic of the prototype should be a central piece of the poster and help the viewer understand how your design functions and highlight key attributes and/or innovative features.
4. ***Code:*** A representation of the code used. It can be a schematic, block-logic diagram, or function block diagram. It should help someone not familiar with coding understand the logical process your design goes through to function.
5. ***Trade Table:*** This table should provide a comparison between your design and other designs on the market. It should show how your design is better than others based on things like cost and available features.
6. ***Data:*** Tables and/or graphs that help the viewer understand how your design evolved.
7. ***Results/Conclusions:*** This should provide a summary of the entire project, how your device meets the objective, and next steps for development or marketing.
8. ***Engineering Design Process:*** Provide viewers with the overview of the methodology your team used. A good graphic that outlines the iterative nature of the process and highlights key steps should help you score well in this section.
9. ***Title & Tagline:*** Your title should both give readers an idea what your project is about and make them want to know more. A tagline is a short message that leaves the reader with one big takeaway about your project that you want them to remember.

Overall, teams are also encouraged and expected to:

- Acknowledge references.
- Use color for emphasis and interest but do not overwhelm your reader.
- Consider their use of space to ensure that it will capture and hold the interest of audience members effectively.
- Make sure your design is neat, uncluttered and very easy to follow from the beginning of your project to the end.

PROJECT REPORT

Using Your Engineering Design Notebook as a Foundation for Your Report

Everything you do to prepare for this competition – be it your design brainstorming, your sketching of possible approaches, your informal and formal research, your building of various prototypes, your testing of each material, modification, or new model, or even your gathering and analysis of the data – everything you do to prepare your final design prototype is part of your engineering design process.

Like most STEM professionals, you will be keeping a notebook to make notes of everything you explore. From Day 1 – you will be using your notebook to tracks your ideas, your progress, your letdowns, your innovations, your interviews, your drawings and your data. Each time you meet, open up your team's notebook(s) and document everything – even your goofiest ideas and your worst drawings or testing results – then when it comes time to write your report, you should have most everything you need in that notebook to write a strong project report.

Refer to the Project Report Rubric to further guide you to ensure you are covering all scoring aspects within your report. Make sure to have others review your report using the rubric to provide feedback. The report you submit should not be your first draft.

Contents (Detailed description of each key section is as follows):

A. Title Page

Title, Authors, MESA State, School name and Date need to be included.

B. Problem Statement

This section is an engaging, synopsis of your problem. It should be written using minimal technical terms. It should describe, in detail, the client and their need(s), what need(s) your project is addressing and why, and any limitations you found as you worked through the Engineering Design Process.

C. Design Process

This is the longest section of the report. This section should guide the reader through your entire project showing a clear connection between each stage (Inspiration to Ideation to Implementation). It presents and thoroughly discusses all key evidence from your engineering design process and findings. As you explain these findings, make sure to include the right kind of compelling graphics to help readers better visualize your data or information (e.g. data tables/graphs or other figures/charts) that is embedded in the report. As you explain your process and points, make sure to refer to the appropriate graphic within the paragraph in which it first becomes relevant.

1. Discuss your team's design process, including:
   a. *Process Overview*. Clearly overview your team's design process.
   b. *Research.* Make certain to discuss; prior knowledge about the problem brought by team members; interviews with clients discussing the issue and their needs; and other research done to understand the client's needs, explore current solutions, and information gathered to assist in design process.

c. *Design Process/Testing.* Clearly explain what aspects of your design process (including brainstorming, research, design selections, modifications, testing, etc.) most informed all of your major design choices. Be specific. What part of your process most impacted your choices and how? How did you ensure that the client's needs were accounted for during the process?

d. *Prototype Development* – discuss the evolution of your design including how the client's needs connected to the testing, data analysis, and changes between iterations of the design.

e. *Discussion of electronics hardware integration.* Detail the integration of the electronic hardware components into your solution. Discussion should include breakthroughs, challenges and compromises made to integrate these components.

f. *Discussion of Software development.* Clearly describe the development of the code used to control the electronic components. A copy of your commented code should be included in the appendix (See samples on page 18).

g. *Conclusion and Recommendations.* Clearly define conclusion and recommendations that demonstrate a thorough reflection on the process and final design and include specific suggestions for further development.

2. Quality and Thoroughness

a. *Go The Extra Mile.* Clearly describe any extra measures your team made to be more conscientious in ensuring that your design's quality went beyond the call of the specifications. For example, is your final design durable, or easy for the client to use? If you did a viability or impact study to see the positive and adverse impacts of your design (i.e. on society, the environment, hypothetical clients, etc.), what did you learn?

b. *Testing Procedures.* Clearly describe your experimental procedures and test setup, including relevant pictures or diagrams.

c. *Math and Science Concepts.* Clearly articulate what Math and Science concepts were used throughout the process.

Overall, the discussion section should be imaginative enough to hold the reader's interest and organized logically. Three common ways to organize are shown below:

- *Chronological development:* present information in order of occurrence, which is usually the easiest way to organize.
- *Subject development:* present information by subjects, grouped in a predetermined order.
- *Concept development:* arrange information as a series of ideas that reveal the reasoning process used to reach your conclusions. This requires more careful organization but also allows for more creativity and persuasion. Writers should anticipate reader reactions. If presenting a controversial concept, establish a strong case before discussing it in detail. If presenting a popular or familiar concept, briefly and simply establish your case.

F. Results

This section should be about the final iteration of the prototype. It should include why your prototype is a viable solution for your client(s) and what the strengths are.

G. Recommendations

This section should include what your next steps are. If your prototype needs further development, what would you like to do? If your prototype is ready for production, what steps would you take to start the process? This sections should include language about the future and what you would do given more time to work on the prototype, or suggestions to help others who may continue to work on the project.

I. Appendix

Please be sure to also include here the following:

a. Data: The data should be clearly related to important design steps and improvements. It should include charts, graphs, tables, etc. with a brief explanation of the data (Title, labeled axis, etc.). Any equations you used should also be in this section is a description of the equation, labeled variables, and purpose.
b. Commented Arduino Code: What is the code that you used? Did you comment it so the reader can understand the variables and what they do, the different sections of the code and what they do, and what the outputs represent? Examples of Commented Code are included in this guide.
c. Detailed Budget Sheet: A sample budget sheet is included below. The budget sheet should help an investor understand the cost of parts for production. Receipts ARE NOT required.

J. Bibliography

All sources that are consulted should be properly cited according to either APA, IEEE, or another standard format. Please introduce all sources with a brief sentence explaining which format you chose and why.. We encourage you to seek at least eight (8) highly relevant sources that are appropriately formatted.

PROTOTYPE PITCH

In addition to the technical interview, teams will deliver a pitch for their solution. During the prototype pitch, teams will attempt to convince investors or management that their design meets the client's needs, is superior to other option available, and has business value as a product. The pitch should be engaging and informative. The judges will consider how well the team presents details of the prototype design, the design process, the impact of the prototype on the target user, and the overall quality of the presentation.

A goal of the Product Pitch is to "sell" your product to the judges. This summary is an approach to a marketing strategy that you may use to develop your Product Pitch.
(Source:smallbusiness.chron.com....edited for MESA)

The four Ps in marketing strategy are product, price, place and promotion. These are the four factors you must consider when you plan your marketing strategy. The four Ps are also known as the "marketing mix." To meet the needs of different customers or market sectors, you can change the mix by varying the product you offer, the price you charge, the place you sell it and the way you promote it.

Product

The right product is the one that meets the needs of your clients. You must carry out engineering design research to identify those needs and obtain feedback to ensure your product meets them. By monitoring product review sites you can assess how well your product performs compared to its competitors. Use your Engineering Design Notebook to help you improve different aspects of the product to improve performance. Adding more features that are important to clients, improving quality, changing the packaging or offering the product in different sizes or quantities are examples of changes that can make your product more appealing to your client.

Price

The price you set for your product must represent value to your customers. By comparing the price your competitors charge and the features they offer, you can assess whether your product offers greater value for money. You must also take account of changing prices in the market. You must calculate the projected sales so that you can maintain profit levels. Pricing decisions also cover the level of discount you offer to trade customers, such as retailers or distributors.

Place

To make decisions about place, you must understand where clients will buy your type of product. When you sell consumer products, you can distribute them through retail outlets, mail-order catalogs or the Internet. Geography is another factor to consider. You may decide to offer your products locally to minimize transportation costs or sell in other regions or other countries to take advantage of client demand.

Promotion

You must promote your product to make your client aware of it and build preference for your brand. You can promote your product through a variety of channels, including advertising, direct mail, website content, newsletters or press releases. To promote your product effectively, you must communicate the benefits that are most important to your client. Market research and your Engineering Design Notebook can help you identify the most important benefits.

Elements of the prototype pitch:

The prototype pitch consists of five elements: *Client Introduction and Problem Definition*, *Prototype Description*, *Prototype Demonstration*, *Business Value* and overall *Presentation Quality*.

Client Introduction and Problem Definition: The judges and audience should gain a clear understanding of the client and the problem that is being addressed. The presentation should include:

- Information about the client base including market size (population), market location, and market area.
- Impact of the problem on the client/end user.
- Specific information gained from the client about design requirements needed.
- Ways the problem is being currently addressed and weaknesses of these solutions.

Prototype Description: The judges and audience should gain a clear understanding of the team's prototype. The presentation should include:

- Discussion of what makes this design original or innovative.
- Discussion of how the design process (including testing) led to the prototype.
- Advantages of this prototype over existing solutions.

Prototype Demonstration: The judges and audience should gain a clear understanding of the functionality and usability of the prototype. The demonstration portion of the prototype pitch should include:

- Explanation of all features and functions of the prototype and how it meet's the client's criteria for look, feel, and cost.
- Demonstration of the functionality of the prototype and give evidence that it is easy to use.
- Next steps needed to bring the prototype to the client.
- Discussion of scalability and potential of the design as a product and/or in the current market.

Business Value: The judges and audience should gain a clear understanding of the value of the prototype as a product on the market. This section should include:

- An analysis of the market that demonstrates that your team understands the market and shows that the market is large enough to sustain business.
- A discussion of the price point for your product, how you determined this price point, and how your product is both competitive and profitable
- A discussion of a plan that will successfully advertise your product and reach the target market

Presentation Quality: The judges and audience should be engaged and informed by the prototype pitch. The presentation should include:

- Introduction of all team members and equal participation of all team members.
- Effective speaking practices (e.g., appropriate tone and pace, flow, volume, clarity, etc.)
- Body language that uses natural gestures and portrays confidence.
- Effective organization (i.e., strong and inviting introduction, focused and clear body, and effective and unifying closing)
- Content which demonstrates deep understanding of ideas, concepts, themes, and information related to the problem.
- Creativity and/or use of visual aids that contribute to a compelling presentation and keep the audience engaged

Teams are also encouraged to be creative and dynamic when presenting the prototype pitch. For instance, teams may choose to interact with the audience during the pitch. Remember, the goal is to convince investors or management that the team has a great, marketable idea. Teams are encouraged to use PowerPoint as part of the prototype presentation as well as video clips and other audio and visual aids.

HUMAN CENTERED DESIGN

Human-Centered Design is at the heart of this challenge. Identifying a client and researching their needs should be the first step a team takes. The client and their needs will then inform the entirety and be present in every step of the design process.

This may be a new approach to your MESA project so if you need assistance in understanding HCD and guidance in starting check out the following resources:

1. IDEO.org – A company with HCD at its core. Learn more about them and their approach.
2. IDEO's Design Kit – dig deeper into HCD with this kit.
3. Stanford's Design School Wallet Project – Project to help you practice HCD

ISOMETRIC & ORTHOGRAPHIC DRAWING SAMPLES

Isometric Drawing with Dimensions[1]

- For more information on how to create isometric drawings visit

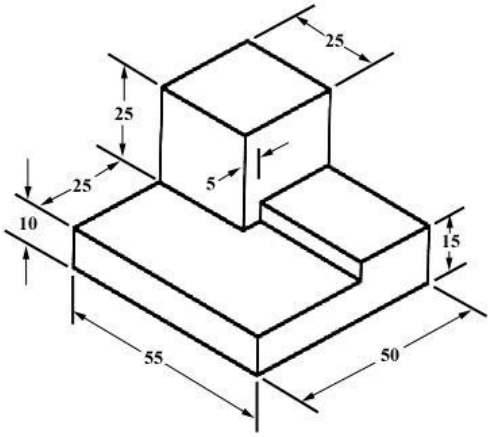

http://www.me.umn.edu/courses/me2011/handouts/drawing/blanco-tutorial.html

Orthographic View[2]

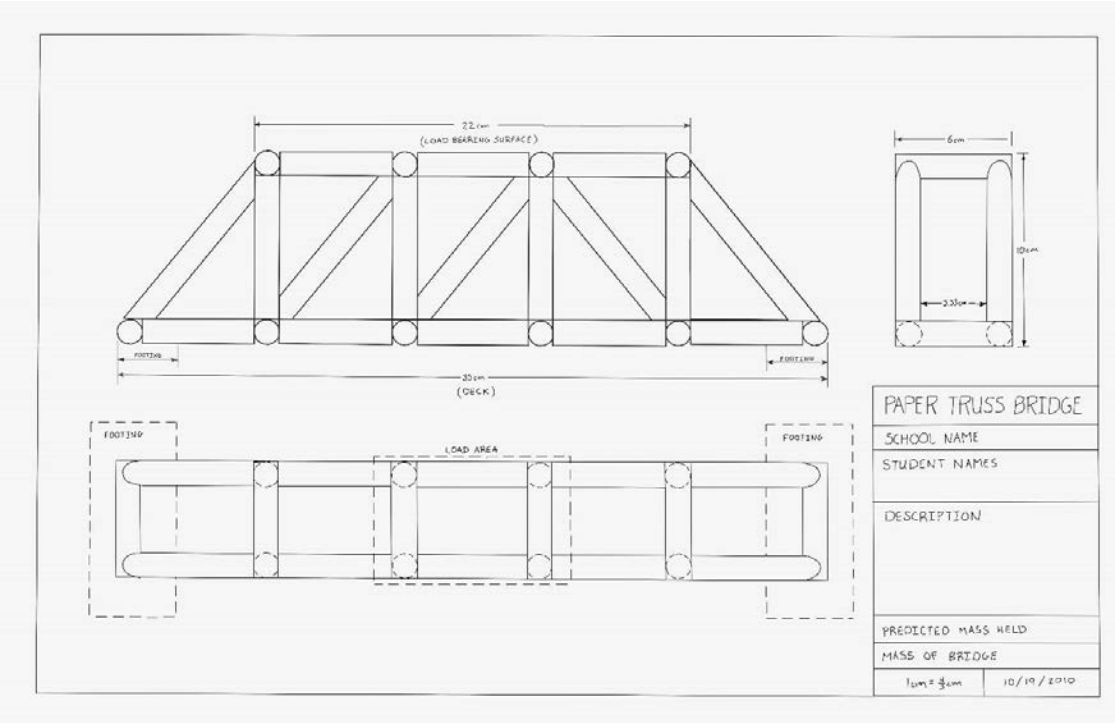

1. Blanco, Ernesto E., David G. Wilson, Sherodalyn Johnson, and LaTaunynia Flemings. "Engineering Drawing and Sketching." *Engineering Drawing and Sketching*. University of Minnesota Mechanical Engineering Department, n.d. Web. 25 July 2013. http://www.me.umn.edu/courses/me2011/handouts/drawing/blanco-tutorial.html .
2. Moriarty, Dylan. Paper Truss Bridge Drawing. Digital image. Arizona MESA, 26 Oct. 2010.

BLOCK LOGIC DIAGRAM SAMPLE

The logic shown demonstrates:

A. Configuring the Arduino input and output signals;
B. Driving the motor first in one direction for 10 seconds, and then reversing the motor direction for another ten seconds;
C. Turning the LED off and on during the running of the motor; and,
D. Exiting the program.

Note: This is only a sample. Please research and use a diagram design that makes sense to you and will be easy for others to follow.

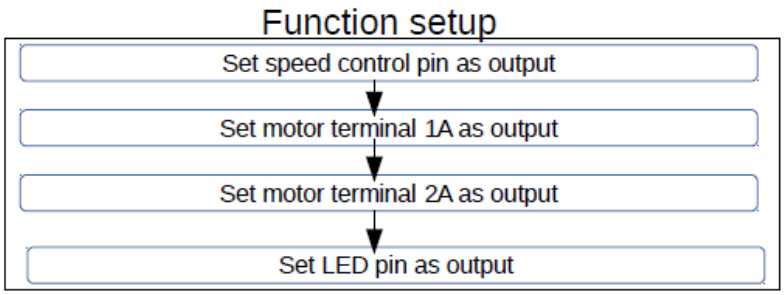

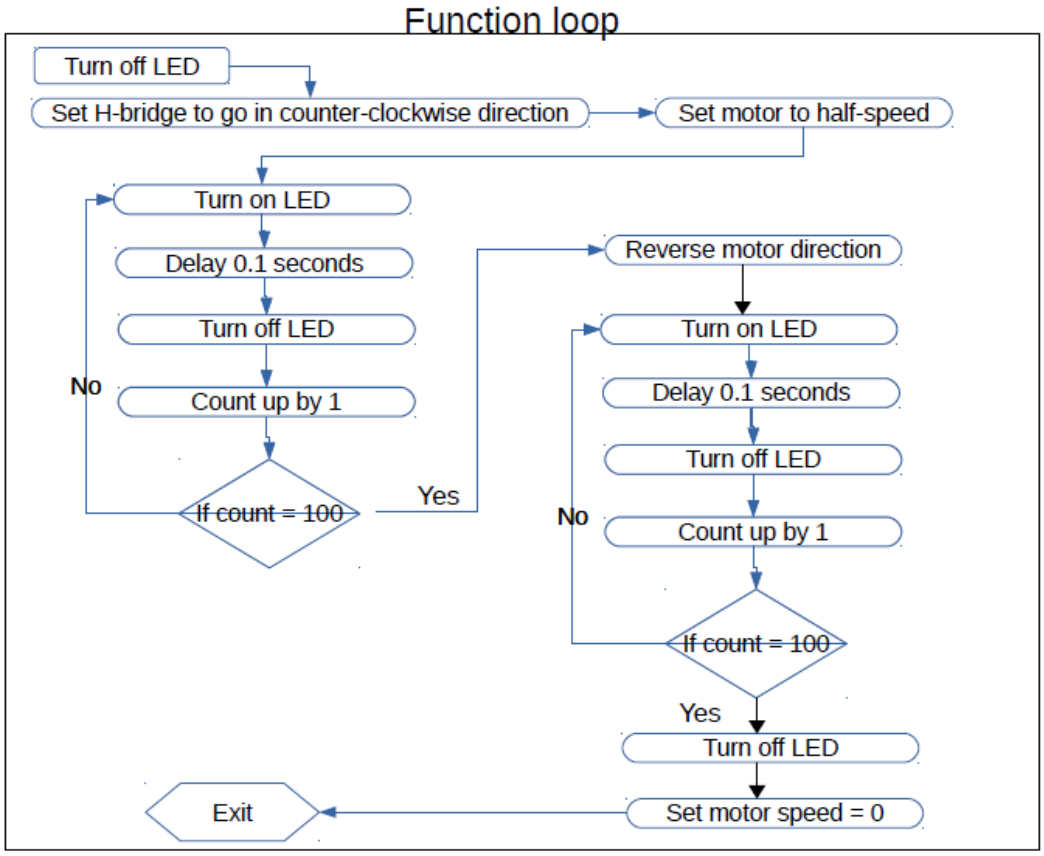

COMMENTED CODE EXAMPLE

Everything after the "//" is a comment and not part of the code

```
// Solar Tracker
// Written by Michael Klements

# include < Servo.h>.

Servo tracker; // create servo object to control a servo
int eastLDRPin =0; // Assign analogue pins
int westLDRPin= 1;
int eastLDR=0; // Create variables for the east and west sensor values
int westLDR=0;
int error=0;
int calibration= 204; // Calibration offset to set error to zero when both sensors receive an equal amount of light
int trackerPos=90; // Create a variable to store the servo position

void setup ( )
{
        tracker. attach (11) ; // attaches the servo on pin 11 to the servo object
}
void loop ( )
{
eastLDR =calibration + analogRead (eastLDRPin) ; // Read the value of each of the east and west sensors
westLDR = analogRead (westLDRPin);
if (eastLDR<350 & & westLDR<350) // Check if both sensors detect very little light, night time
{
while (trackerPos<=160) // Move the tracker all the way back to face east for sunrise
        {
        tracker Pos++;
        tracker. write (tracker Pos);
        delay (100) ;
        }
}
        Error= eastLDR - westLDR; / / Determine the difference between the two sensors.
        if (error > 15) // If the error is positive and greater than 15 then move the tracker in the east direction
{
        If(trackerPos<=160) // Check that the tracker is not at the end of its limit in the east direction
{
        trackerPos++;
        tracker. write (trackerPos ); / /Move the tracker to the east
        }
}
else if (error<-15)   // If the error is negative and less than —15 then move the tracker in the west direction
{
        if (tracker Pos > 20) // Check that the tracker is not at the end of its limit in the west direction
        {
        trackerPos--;
        tracker.write (trackerPos) ;/ / Move the tracker to the west delay (100);
}
```

PSEUDOCODE SAMPLES

Pseudocode is an informal description of your programming logic. It should summarize and/or outline the program's steps and should not contain any code syntax or underlying technology considerations. **Most importantly it should make sense to you and be easy for others to follow.**

Below are examples of what pseudocode could look like for the program described in the Block Diagram sample on page 13.

Sample 1:

```
The "setup" function:
        Speed control is an output
        Motor terminal "1A" is an output
        Motor terminal "2A" is an output
        LED pin is an output
        Set motor_max_speed to 100Note: maybe speed can take on a different value?

The "main" function:
    Turn LED OFF then:
    Set H-bridge_dir to "counter-clockwise"
    Set motor speed to (motor_max_speed) * 0.5 Note: half of my max speed
    Set counter to 0
    IF counter does not equal 100 THEN:
        Turn on LED
        pause for 0.1 seconds
        Turn off LED
        Add 1 to counter
    OTHERWISE if counter equals 100:
        Note: whatever direction I'm in, go the opposite
        IF h-bridge_dir is set to "clockwise", set to "counter clockwise
        OTHERWISE if its set to "counter clockwise", set it to "clockwise"
        Set counter to 0
        IF counter does not equal 100:
                Turn on LED
                pause for 0.1 seconds
                Turn off LED
                Add 1 to counter
        OTHERWISE if counter equals 100:
                Turn off LED
                Turn off the motor
                EXIT the program
```

Sample 2:

```
Set-Up Function
        Speed control is an output. Motor terminal "1A" is an output. Motor terminal "2A" is an output
        LED pin is an output. Set motor_max_speed to 100.Note: maybe speed can take on a different value?
Main Function
    Turn LED OFF. Set H-bridge_dir to "counter-clockwise." Set motor speed to (motor_max_speed) times 0.5
    Note: half of my max speed. Set counter to 0. IF counter does not equal 100. Turn on LED. Pause for 0.1
    seconds. Turn off LED. Add 1 to counter. OTHERWISE if counter equals 100. Note: whatever direction I'm in,
    go the opposite. IF h-bridge_dir is set to "clockwise", set to "counter clockwise. OTHERWISE if its set to
    "counter clockwise", set it to "clockwise." Set counter to 0. IF counter does not equal 100. Turn on LED. Pause
    for 0.1 seconds. Turn off LED. Add 1 to counter. OTHERWISE if counter equals 100. Turn off LED.  Turn off
    the motor. EXIT the program
```

ITEMIZED BUDGET SHEET SAMPLE*

MESA Center:_____ MESA School: _____

Level: MS HS Advisor/Teacher:_____

Student Team:_____

Part	Unit Dimensions	Retail Price	Price per Unit	Quantity Used	Total Cost	Retail Source	Receipt
6061 Aluminum flat	*1/8" x 1/2" x 24"*	*$1.98/flat*	*$0.0825/inch*	*10 inches*	*$.0.82*	*Metalsdepot.com*	*1*
Masking Tape	*1 inch x 60 yards*	*$4.02*	*$0.0019/inch*	*12 inches*	*$0.02*	*TheSupplyTree.com*	*2*
					TOTAL COST		

* A spreadsheet that will automatically calculate the budget has been created and is available for teams to use. Contact your state representative or visit the MESA USA website for a copy.

QUESTION AND FEEDBACK PROCESS

When asking for clarification on the National Competition Rules or for any other question about the National Competition the following process will be used:

1. Teams must contact their state representative via email (see the list below).*
2. If possible, the state representative will respond via email. This question and the response will also be provided to other schools within that state.
3. If necessary, the representative will contact the National Rules Committee to discuss the question. The committee's decision will be relayed to all states for public distribution and the question will be listed on the national FAQ list on the MESA USA website (MESAUSA.ORG).

* Questions sent directly to the National Rules Committee will be rerouted to the state representative.

State Representatives:

- Arizona – Manny Leon (leon@arizona.edu) or Bill Pike (wpike@email.arizona.edu)
- California – Carlos Gonzalez (carlosg@engr.ucr.edu)
- Colorado – contact National Committee at nationalcompetition@mesausa.org
- Illinois – contact National Committee at nationalcompetition@mesausa.org
- Maryland – Jason Cartwright (jason.cartwright@jhuapl.edu)
- New Mexico – Anita Gonzales (anita@nmmesa.org)
- Oregon – Tamara Depue (tdepue@cecs.pdx.edu)
- Pennsylvania – Jesus Davalos (tug64370@temple.edu)
- Utah – Dr. Paul Ross (buffyross@msn.com)
- Washington – Debbie Blas (Debbie.blas@wsu.edu)